SECTION 1
NUCLEAR POWER SYSTEM

1.1 GENERAL DESCRIPTION

The GPHS-RTG is a radioisotope-fueled, thermoelectric generator consisting of two major components: the General Purpose Heat Source (GPHS) and the thermoelectric converter assembly. A cut-away view of the GPHS-RTG is shown in Figure 1-1 to illustrate its internal construction and the position of the GPHS modules within the thermoelectric converter assembly.

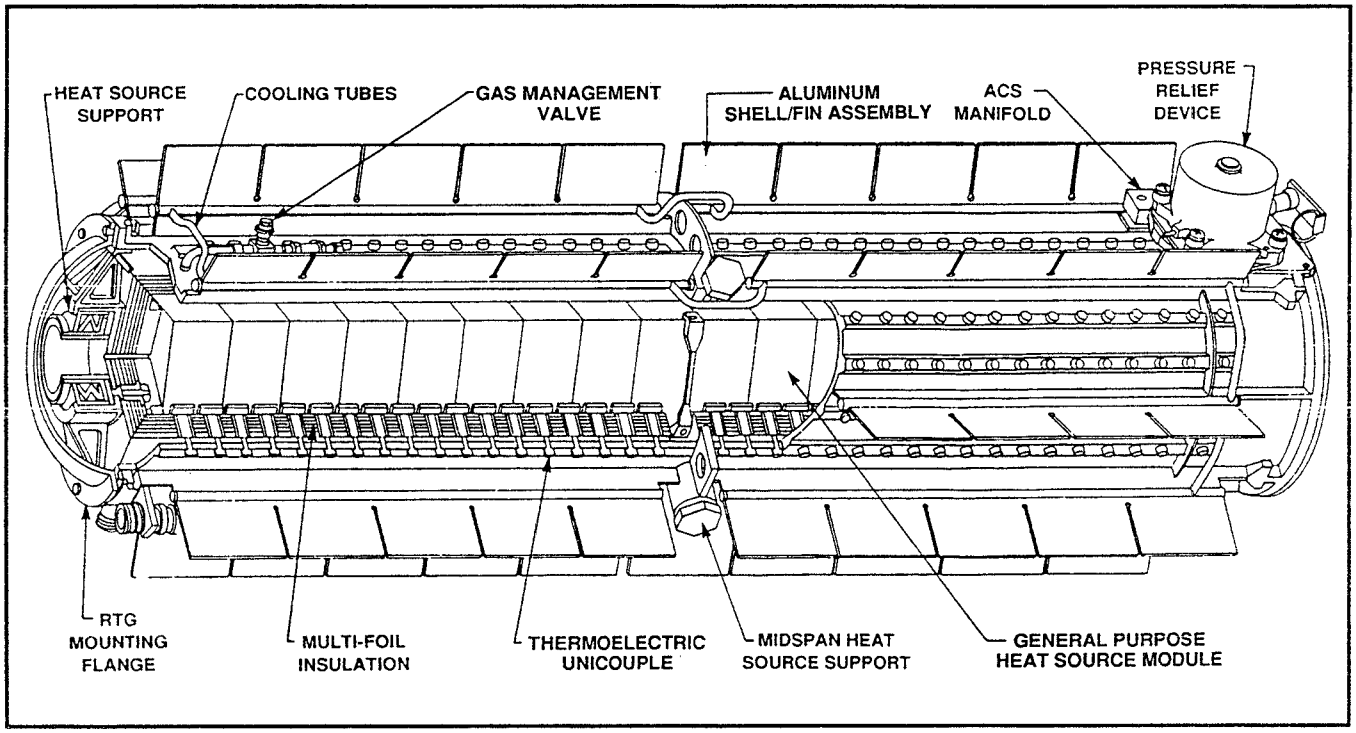

Figure 1-1. GPHS-RTG

The GPHS is comprised of 18 modules. A cut-away view of a single GPHS module is shown in Figure 1-2. Each module contains four plutonium dioxide (PuO_2) fuel pellets, with a thermal inventory of approximately 62.5 watts per pellet. Each pellet is encapsulated within a vented iridium capsule, which functions as the primary fuel containment. The encapsulated pellet is called a Fueled Clad (FC). Each GPHS module contains four FCs encapsulated within two cylindrical Fine Weave Pierced Fabric (FWPF) containers, known as Graphite Impact Shells (GISs). Thermal insulators made from Carbon Bonded Carbon Fiber (CBCF) surround each GIS. These insulators are designed to provide acceptable iridium temperatures during possible reentry, both during descent and at impact. Two GISs

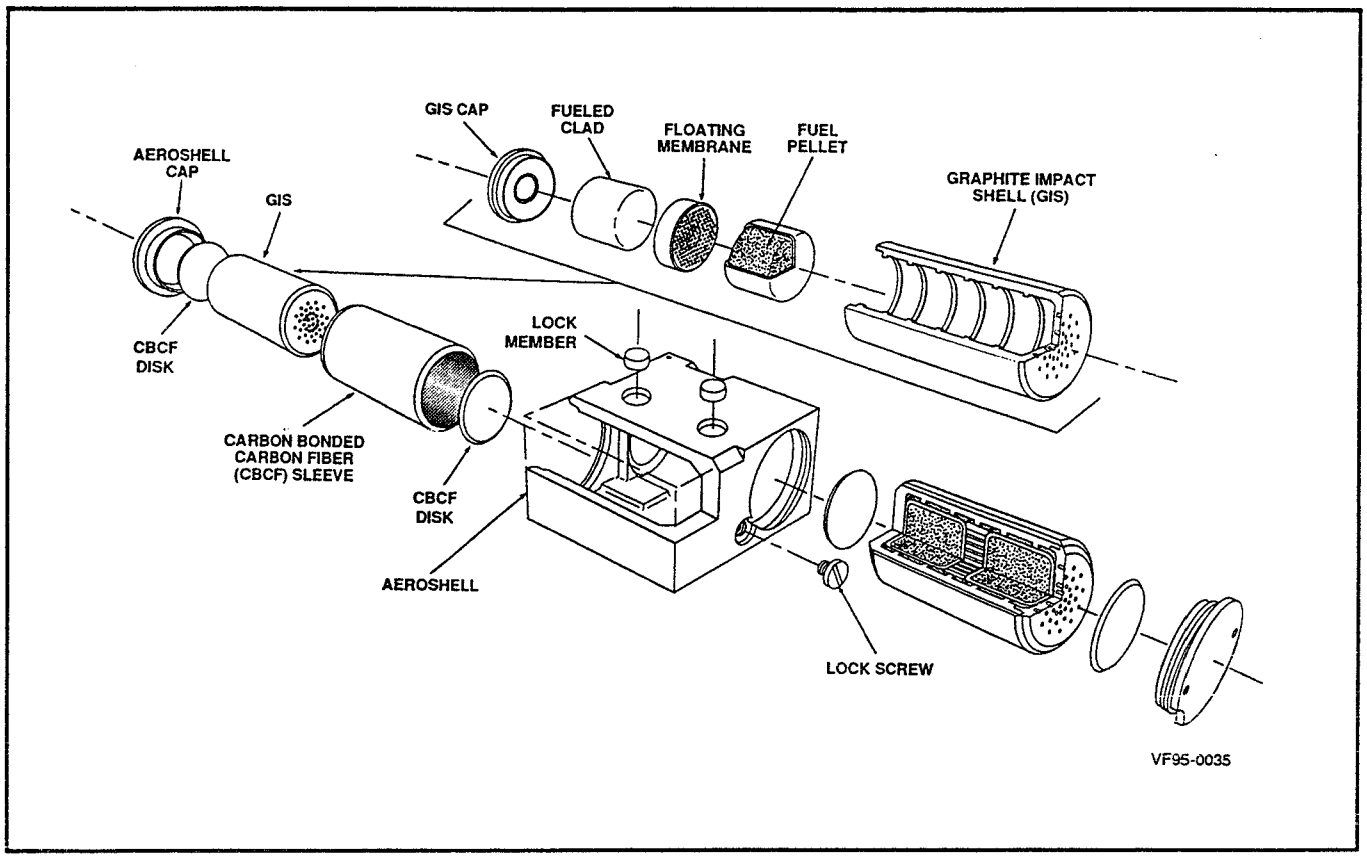

Figure 1-2. General Purpose Heat Source Module

with thermal insulator disks and sleeves are placed in a rectangular aeroshell to form a GPHS module. The aeroshell is the primary heat source structure that provides reentry protection for the FCs. Eighteen GPHS modules are stacked to provide the total thermal inventory required for the GPHS-RTG. FWPF lock members are used to facilitate stacking and to resist shear loads due to lateral loading.

The thermoelectric converter assembly is comprised of a thermopile assembly, a shell/fin assembly, a heat source support assembly, and auxiliary components. The thermopile assembly consists of 572 thermoelectric elements (unicouples), embedded in an assembly of multifoil insulation, which converts the decay heat from the isotope fuel directly into electrical energy. The multifoil insulation minimizes heat losses from the converter assembly and thereby provides the desired hot side and cold side operating temperatures for the thermoelectric unicouples. The thermoelectric unicouples are supported in cantilever fashion from an aluminum shell/fin assembly, the main GPHS-RTG support structure. The GPHS modules are supported in the thermoelectric converter assembly using a heat source

support system which provides both axial and lateral preload to the modules through the use of spring washers. This enables the GPHS-RTG to withstand the launch and ascent dynamic environments and prevents separation of the GPHS modules under these loads. The thermoelectric converter assembly also includes a gas management system, comprised of a gas management valve (GMV) and a pressure relief device (PRD). The GMV is manually actuated to pressurize the GPHS-RTG with inert gas during ground operations. The inert gas provides protection for the interior of the GPHS-RTG and minimizes degradation of the thermoelectric elements. Just prior to launch, the inert gas is changed from argon to xenon to improve the partial power capability of the GPHS-RTG during the initial stages of launch. The GPHS-RTG is required to be leak tight so that it can be pressurized to 25 psi and retain a positive pressure (>0.5 psi) relative to ambient for at least 30 days without repressurizing. The PRD is barometrically activated after launch to vent the inert gas from the GPHS-RTG, enabling the GPHS-RTG to achieve full power output during vacuum operation. The envelope dimensions of the GPHS-RTG are 42 cm in diameter (from fin tip to fin tip) by 114 cm long.

1.2 DESIGN REQUIREMENTS

1.2.1 Radioisotope Thermoelectric Generator

Reference 1-1 defines the design, performance, construction and testing requirements for the GPHS-RTGs for the Cassini mission. The major design attributes and requirements are summarized in Table 1-1. A detailed description of the thermoelectric converter assembly is provided in Section 1.5. The Cassini mission will employ three GPHS-RTGs designated as F-2, F-6 and F-7. F-2 was fabricated as an Electrical Thermoelectric Generator (ETG) for the Galileo/Ulysses missions, but was not fueled as an RTG for those missions. F-6 and F-7 are being fabricated specifically for the Cassini mission. A GPHS-RTG, identified as F-5, is the designated spare for the Cassini mission. F-5 was fabricated and fueled for the Galileo/Ulysses missions and, therefore, its fuel is producing less power. The F-2, F-6, and F-7 GPHS-RTGs utilize fuel processed for the Cassini mission. The electrical power output requirements for the Cassini mission GPHS-RTGs are summarized in Table 1-1.

Table 1-1. GPHS-RTG Performance Requirements

Mission Power Output	
Beginning of Mission (BOM) *	274 watts (e) - F-2 276 watts (e) - F-6, F-7
Sixteen Years after BOM	198 watts (e) - F-2 199 watts (e) - F-6, F-7
Operating Life	18 years including 2 years in test and storage and 16 years mission operation
Mass	56.7 kg maximum
Output Voltage	30 volts
Launch Power Output *	172 watts (e) - F-2 174 watts (e) - F-6, F-7
GPHS Fuel Loading *	4258 watts (t) minimum
Neutron Emission	$< 7.0 \times 10^3$ n/s/g of ^{238}Pu (unshielded GPHS-RTG)
Magnetic Field	< 78 nT at 1 meter from geometric center of GPHS-RTG
Gas Management	GPHS-RTG to maintain positive pressure (>0.5 psi) without repressurization for at least 30 days prior to launch

(e) = electric (t) = thermal

* Projected to the October 1997 launch date for Cassini GPHS-RTGs.

1.2.2 General Purpose Heat Source

Reference 1-2 defines the design, performance, manufacturing, and qualification requirements for the GPHS for the Cassini mission. The heat source design requirements pertaining to fuel, fuel loading, mass, and dimensional envelope are summarized in Table 1-2.

Table 1-2. GPHS Design Requirements

Fuel	• Plutonium dioxide • ^{238}Pu content is a minimum of 82 weight % of total plutonium	
Fuel Loading	PuO_2 (grams)	Thermal Power (watts)
GPHS	10,872	4258* Minimum
GPHS Module	604	238* Average
Fueled Clad	151	62.5** Nominal
Mass (maximum)	1.44 kg - GPHS module (exclusive of lock members) 26.17 kg - GPHS (18 modules and lock members)	
Envelope (single GPHS module)	5.31 cm (height) x 9.32 cm x 9.72 cm	

* at BOM (October 1997)

** at time of FC calorimetric measurement

A detailed description of the heat source components is provided in Section 1.4. Many of the design constraints were dictated by safety considerations. The safety philosophy employed in the design of the GPHS was to assure, to the maximum extent possible, containment and immobilization of the plutonia fuel. This applies to all mission phases, including ground handling, transportation, launch, ascent, temporary orbit and during unplanned events such as reentry, impact and post-impact situations.

1.3 RADIOISOTOPE FUEL

1.3.1 Type of Fuel

The radioisotope fuel is an isotopic mixture of plutonium in the form of the dioxide, PuO_2. The ^{238}Pu content is 82.2 weight percent of the total plutonium based on the assay data for the fuel used in the F-2 and F-7 heat sources (Appendix A). Specific details regarding the fuel feed powder may be found in Reference 1-3. The physical form of the fuel is a cylindrical, solid ceramic pellet, chamfered and dished at each end. The pellets have a diameter of 2.76 ± 0.02 cm and a length of 2.76 ± 0.04 cm. The average geometric density of the fuel is 9.86 g/cm^3, based on the assay data for the fuel used in the F-2 and F-7 heat sources (Appendix A). The average specific thermal power of the fuel at Beginning of Mission (BOM) is 0.403 W/g, also based on the F-2 and F-7 heat source assay data (Appendix A). The resultant calculated average power density based on the average density and specific power is 3.97 W/cm^3. The half life of the ^{238}Pu isotope is 87.75 years.

1.3.2 Quantity of Fuel

Each pellet contains approximately 151 grams of fuel and provides a thermal inventory of approximately 62.5 watts at the time of FC calorimetry. The 72 pellets within the F-2 GPHS will provide a projected thermal power of 4368 watts at launch. The 72 pellets within the F-7 GPHS will provide a projected thermal power of 4404 watts at launch. The thermal power of the F-6 GPHS is not yet available but the F-6 GPHS is expected to have the same nominal thermal power as the F-7 GPHS. A total of 10.9 kg of PuO_2 fuel per RTG (with 82.2 wt % ^{238}Pu) is required to meet mission power requirements. The average activity is 1.344×10^5 curies per GPHS (14.3 curies/gram total Pu; 12.3 curies/gram PuO_2) based on F-2 and F-7 GPHS assay data projected for an October 1997 launch. A thermal power reduction of approximately 0.8 percent per year will occur due to alpha decay.

1.3.3 Properties

The physical, thermal, and chemical properties of the plutonia fuel are summarized in Appendix A.

1.3.4 Nuclear Criticality

Table A-3 (Appendix A) indicates that the minimum critical mass for $^{238}PuO_2$ is 21 kg unreflected and 16.6 kg, water reflected. The total mass of $^{238}PuO_2$ in each GPHS-RTG is 8.9 kg, for a total of 26.7 kg for the three GPHS-RTGs mounted on the Cassini spacecraft. Los Alamos National Laboratory (LANL) has performed criticality analyses on the normal GPHS-RTG configuration and on various configurations of the components of the GPHS heat source (References 1-4 and 1-5). As shown by the summary of the LANL analysis shown in Table 1-3, the criticality factor, k, is less than unity for all credible configurations of the GPHS modules. The criticality factor remains less than unity, even for such hypothetical configurations as 72 GPHS modules (288 FCs) in a near cubical array with fully dense water as a reflector. Even a hypothetical configuration of 648 FCs in a closely packed 9x9x4 GIS array, with fully dense water reflection, is still subcritical. Since the Cassini mission employs 54 GPHS modules (216 FCs), the hypothetical configurations previously described are implausible.

Additional configurations were analyzed in which the effects of spacing (as opposed to close packing) and water with lower density were investigated. In all of these variations, the resulting value of k was lower than for the configurations shown in Table 1-3.

Table 1-3. Criticality Factor, k, for Various Heat Source Combinations *

Assembly	Reflection	k
• Stack of 18 GPHS Modules (i.e., 1 GPHS-RTG)	- None	.252 ± .003
• Stack of 18 GPHS Modules	- Fully dense water	.352 ± .004
• 4 Stacks in square array (closely packed)	- None	.391 ± .002
• 72 GPHS Modules, nearly cubical array	- Fully dense water	.627 ± .004
• GIS Arrays, closely packed	- Fully dense water and interstitial water	
- 4 x 4 x 2 1/2 (80 FCs)		.554 ± .004
- 5 x 4 x 2 (80 FCs)		.560 ± .005
- 6 x 6 x 2 1/2 (180 FCs)		.704 ± .005
- 7 x 7 x 3 (294 FCs)		.789 ± .005
- 9 x 9 x 4 (648 FCs)		.923 ± .005

* Note: For reference, the Cassini mission employs 54 GPHS modules containing 216 FCs

LANL did not estimate the criticality factor of bare fueled clads in closely packed arrays. However, the absence of the GPHS graphite members, even with full water reflection, would be expected to decrease the effective multiplication due to the change in the neutron energy spectrum and resulting neutron capture for fission. Additional margins in bare FC criticality are realized by the fact that the LANL analysis did not include the properties of the iridium clads in the analytical model. Since iridium is a strong neutron absorber in both the thermal and resonance energy regions, the criticality factors listed in Table 1-3 (generated by the LANL model), may be significantly overpredicted.

Recent criticality analyses (Reference 1-6) were performed for arrays of GPHS modules buried in wet sand. The GPHS modules were modeled discretely, including the iridium fuel clad. The criticality factor for a nearly cubical array of 54 modules (3x3x6) buried in wet sand was 0.553 with a statistical uncertainty of ±0.002 when the iridium was included, and 0.659 ± 0.003 when the iridium was replaced by void. The analyses confirm the substantial subcriticality of the GPHS modules, even when placed in optimal arrangements unlikely to be achieved in any accident scenario.

1.4 GENERAL PURPOSE HEAT SOURCE

1.4.1 Component Description

1.4.1.1 Fueled Clad (FC)

Each fuel pellet within a GPHS module is individually encapsulated in a welded iridium alloy (DOP-26) clad which has a minimum wall thickness of 0.055 cm. The clad consists of an iridium shield cup and an iridium vent cup. The DOP-26 alloy is capable of resisting oxidation in a post-impact environment while also being chemically compatible with the fuel and graphitic components during high temperature operation and postulated accident environments.

The fueled clad is designed with an iridium frit vent that permits release of helium gas produced by the decay of the Pu-238 fuel without releasing fuel particulate. The fueled clad also contains a decontamination cover which is welded over the FC vent hole to permit decontamination after encapsulation welding. A weld shield is located inside the FC to provide thermal protection to the fuel during closure welding and to prevent contamination of the weld by the fuel. The decontamination cover is removed from the FC prior to installing the FCs into the heat source assembly. The iridium fuel clad components are shown in Figures 1-3 and 1-4 and the encapsulation requirements are defined in Reference 1-7.

1.4.1.2 Graphite Impact Shell (GIS)

Two fueled clads are encased in a Graphite Impact Shell (GIS) made of Fine Weave Pierced Fabric (FWPF), a carbon-carbon composite material. The FCs are separated by a FWPF floating membrane within the GIS. The FCs are oriented such that the frit vents face the floating membrane. The cylindrical GIS is designed to provide impact protection to the FCs; its minimum wall thickness is 0.424 cm (0.167 inches). The GIS design is shown in Figure 1-5.

1.4.1.3 Aeroshell

Two GISs, each containing two FCs, are located inside each FWPF aeroshell. A Carbon Bonded Carbon Fiber (CBCF) insulator surrounds each GIS within the aeroshell to limit the peak temperature of the FC during inadvertent reentry and to maintain a sufficiently high temperature to ensure its ductility upon subsequent impact. The aeroshell serves as the primary structural member of the GPHS module as it is stacked inside the GPHS-RTG. It is

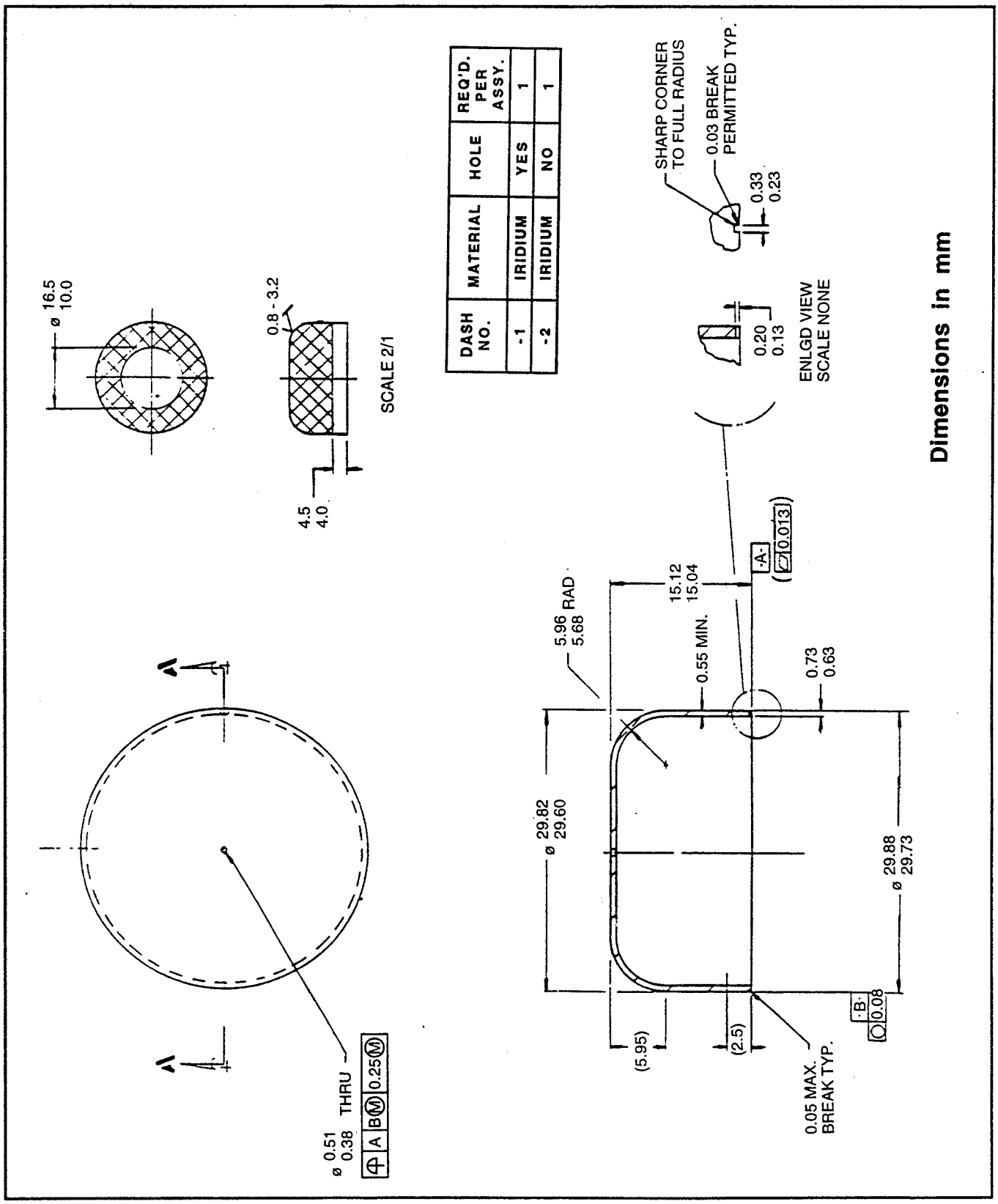

Figure 1-3. Iridium Shield Cup

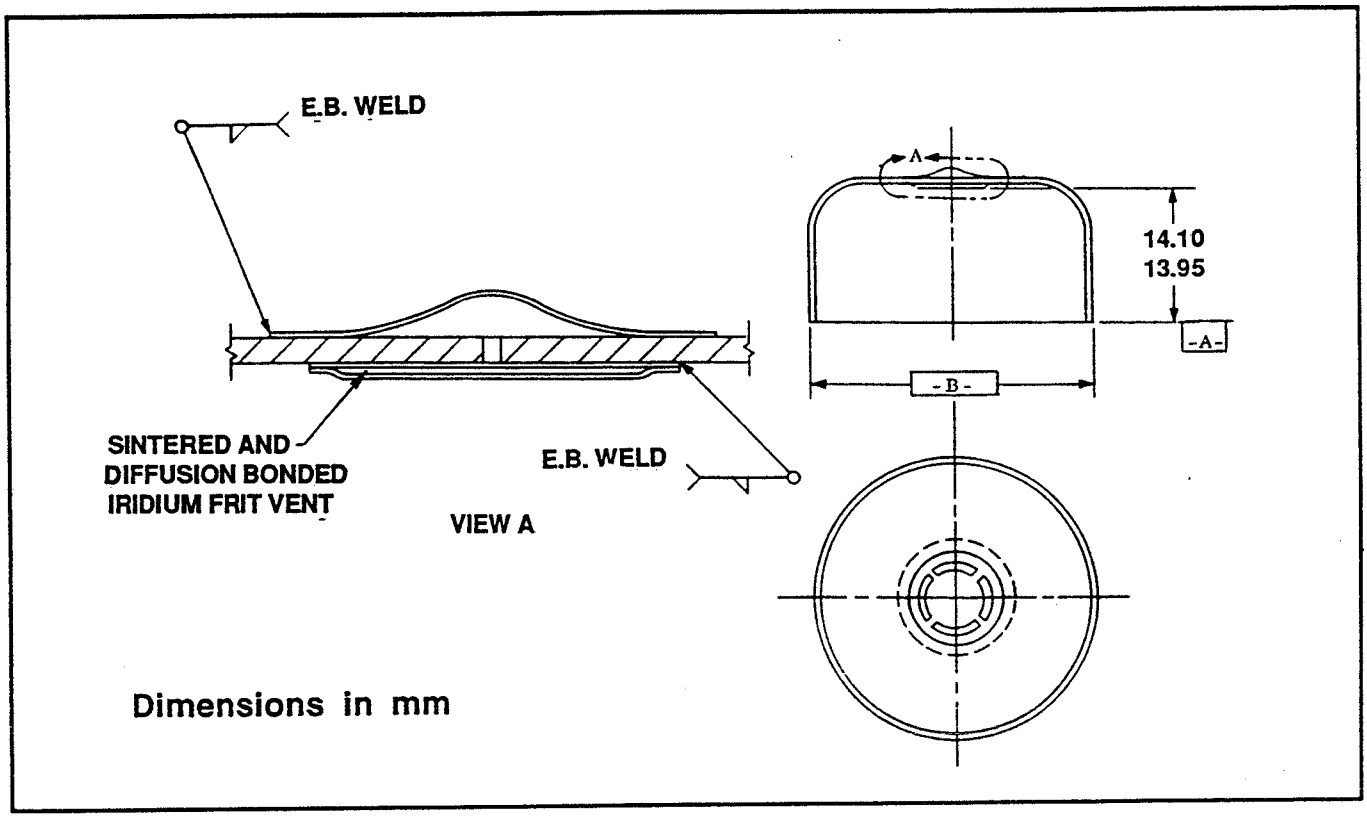

Figure 1-4. Iridium Vent Cup

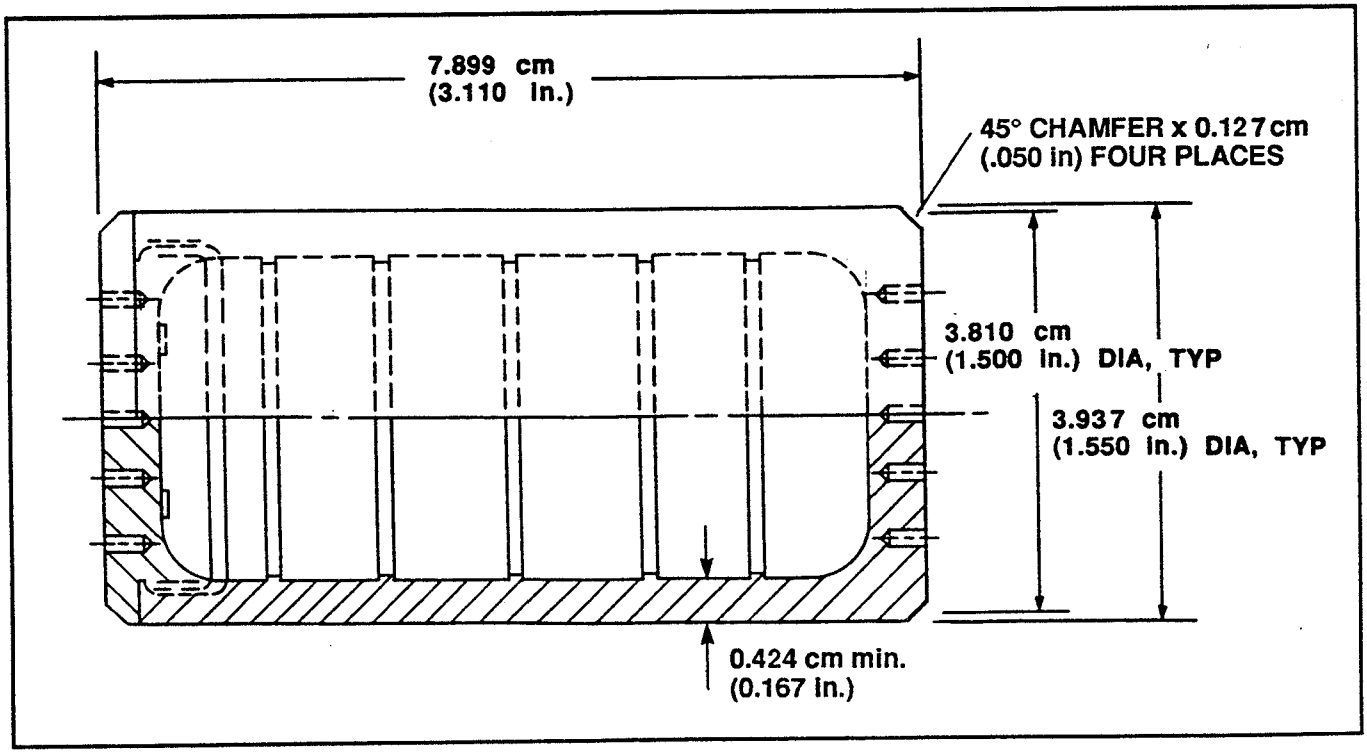

Figure 1-5. Graphite Impact Shell

designed to contain the two GISs under a wide range of reentry conditions and provide additional protection against impacts on hard surfaces at terminal velocity. It also provides protection for the fueled clads against overpressures and fragment impacts during postulated accident events. The aeroshell design is shown in Figure 1-6.

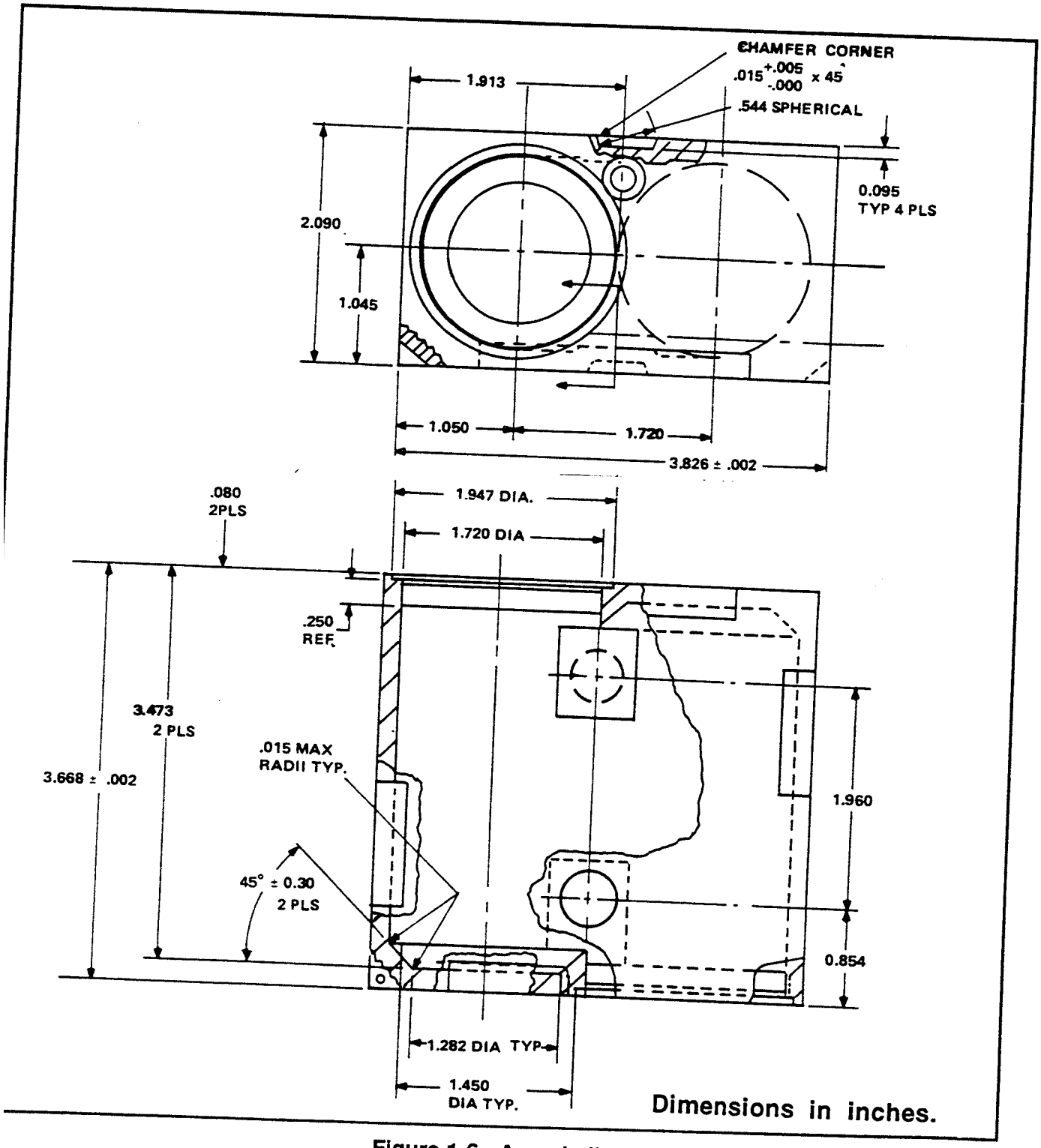

Figure 1-6. Aeroshell

1.4.2 Materials and Weights

A summary of the heat source components, materials, and their associated weights are presented in Table 1-4. The weights shown in this table are averages for actual components.

Table 1-4. GPHS Components

Component	LMMS-VF Reference Drawing	Material	No. Per Heat Source	Unit Weight (kg)	Total Weight (kg)
Fueled Clad	47C305993	PuO_2/Ir	72	0.207	14.893
Graphite Impact Shell	47D305396 47D305397	FWPF Graphite	36	0.091	3.266
Floating Membrane	47C305610	FWPF Graphite	36	0.007	0.245
Insulator	47D305608	CBCF Graphite	36	0.004	0.155
Aeroshell	47D305398 47D305399 47D305609	FWPF Graphite	18	0.402	7.242
Lock Members	47B305212	FWPF Graphite	32	0.001	0.044
Midspan Plate	47E305117	FWPF Graphite	1	0.259	0.259
GPHS Assembly	47D305112	--	--	--	**26.104**

Note: Unit weights are rounded to the nearest gram and cannot be used to accurately determine total weight.

1.4.3 Materials Properties

The physical and thermal properties of the GPHS materials are tabulated in Appendix B.

1.5 THERMOELECTRIC CONVERTER ASSEMBLY

1.5.1 Component Description

1.5.1.1 Shell/Fin Assembly

The converter shell/fin assembly is machined from an aluminum alloy 2219-T6 forging with a finished nominal wall thickness of 0.152 cm (0.060 inches). The use of an aluminum alloy ensures the converter structure will melt and the GPHS modules will be released in the event of a reentry accident. The shell/fin assembly includes eight tapered fins which are electron beam welded to longitudinal ribs integrally machined with the housing. Coolant passages are machined into the fin stubs and are interconnected with tubes to permit coolant circulation. This system was designed for cooling the GPHS-RTG external temperatures within the Shuttle payload bay for the Galileo and Ulysses missions. This system will not be used for the Cassini mission. The external surfaces of the shell/fin assembly are painted with a high emissivity (ε>0.90) silicone-based paint (PD-224) to enhance heat transfer.

The inboard and outboard ends of the shell/fin assembly are sealed through the use of metallic c-seals and aluminum alloy 2219 pressure domes. Metallic c-seals are also used to seal all penetrations in the shell/fin assembly. A gas tight thermoelectric converter assembly is required in order to maintain an internal, inert cover gas during ground operations and launch to preclude oxidation of the GPHS-RTG components. Table 1-5 shows the number of penetrations in the shell/fin assembly and the allowable leakage rate for each of the seals.

The GPHS-RTG is mounted to the spacecraft through the use of an RTG adapter ring (Figure 1-7). The GPHS-RTG is mounted to the adapter ring using four 3/8 inch diameter bolts which attach to the barrel nuts located on the inboard flange of the shell/fin assembly. The RTG adapter ring and GPHS-RTG are, in turn, mounted to the spacecraft.

1.5.1.2 Unicouples

The thermoelectric converter assembly contains 572 thermoelectric unicouples arranged in 16 circumferential rows. The unicouple, shown in cut away view (Figure 1-8), is individually attached to the shell/fin assembly using titanium attachment screws and titanium nut plates located within the unicouple cold stack.

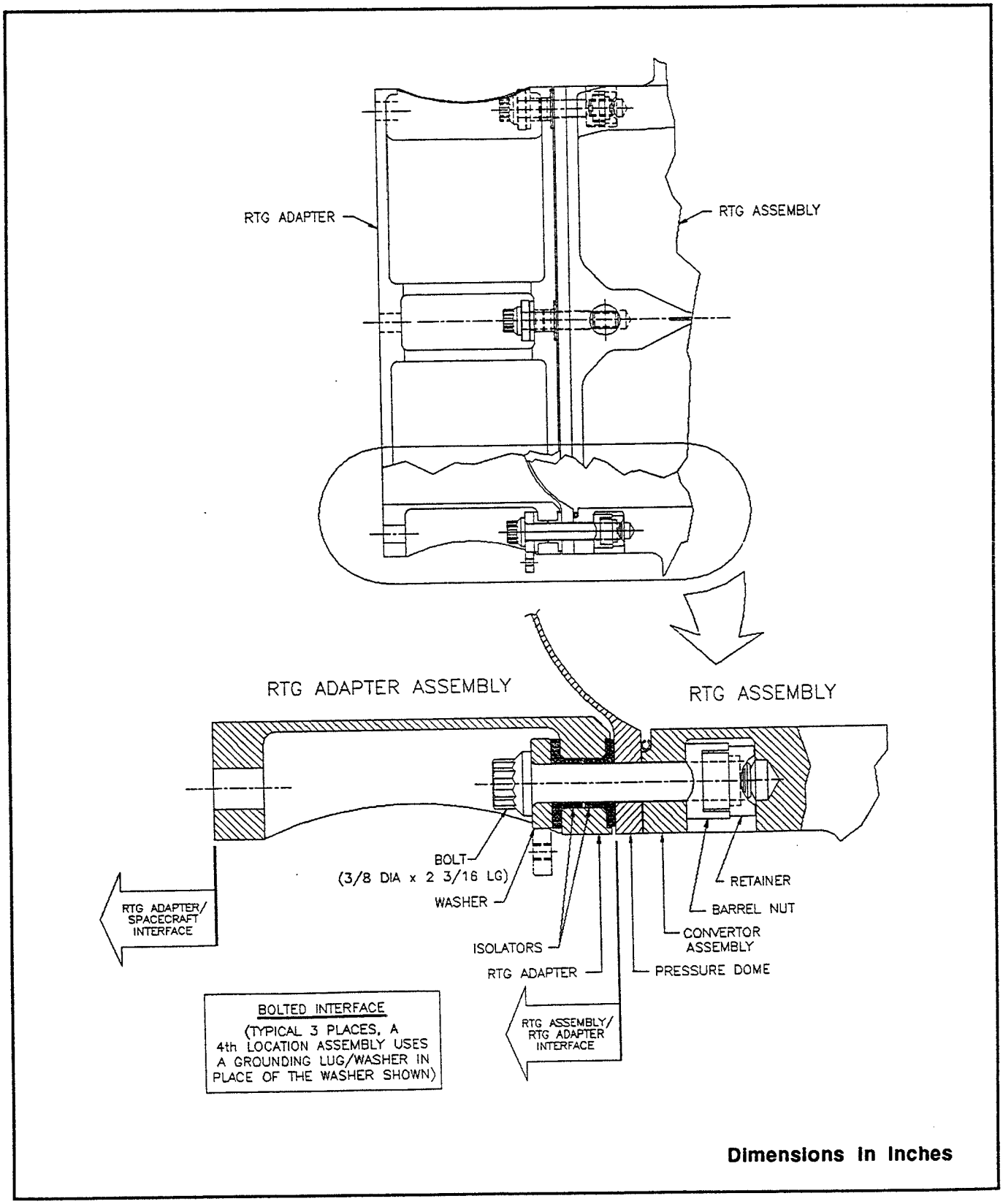

Figure 1-7. GPHS-RTG Mounting Interface

Table 1-5. C-Seal Leakage Rate

Penetration	Allowable Leakage Rate * (std cc Ar/sec)	No. of Seals	Total Allowable Leakage Rate (std cc Ar/sec)
Unicouple and Frame Supports	6.3×10^{-6}	576	36.3×10^{-4}
PRD	5.4×10^{-6}	1	0.05×10^{-4}
Gas Management	8.3×10^{-6}	1	0.08×10^{-4}
Dome	3.4×10^{-4}	2	6.8×10^{-4}
Power Connector	1×10^{-4}	1	1.0×10^{-4}
Mid Span Support	1×10^{-4}	4	4.0×10^{-4}
Total			**48.23×10^{-4}**

* Leakage rate specified at 3 psi differential pressure

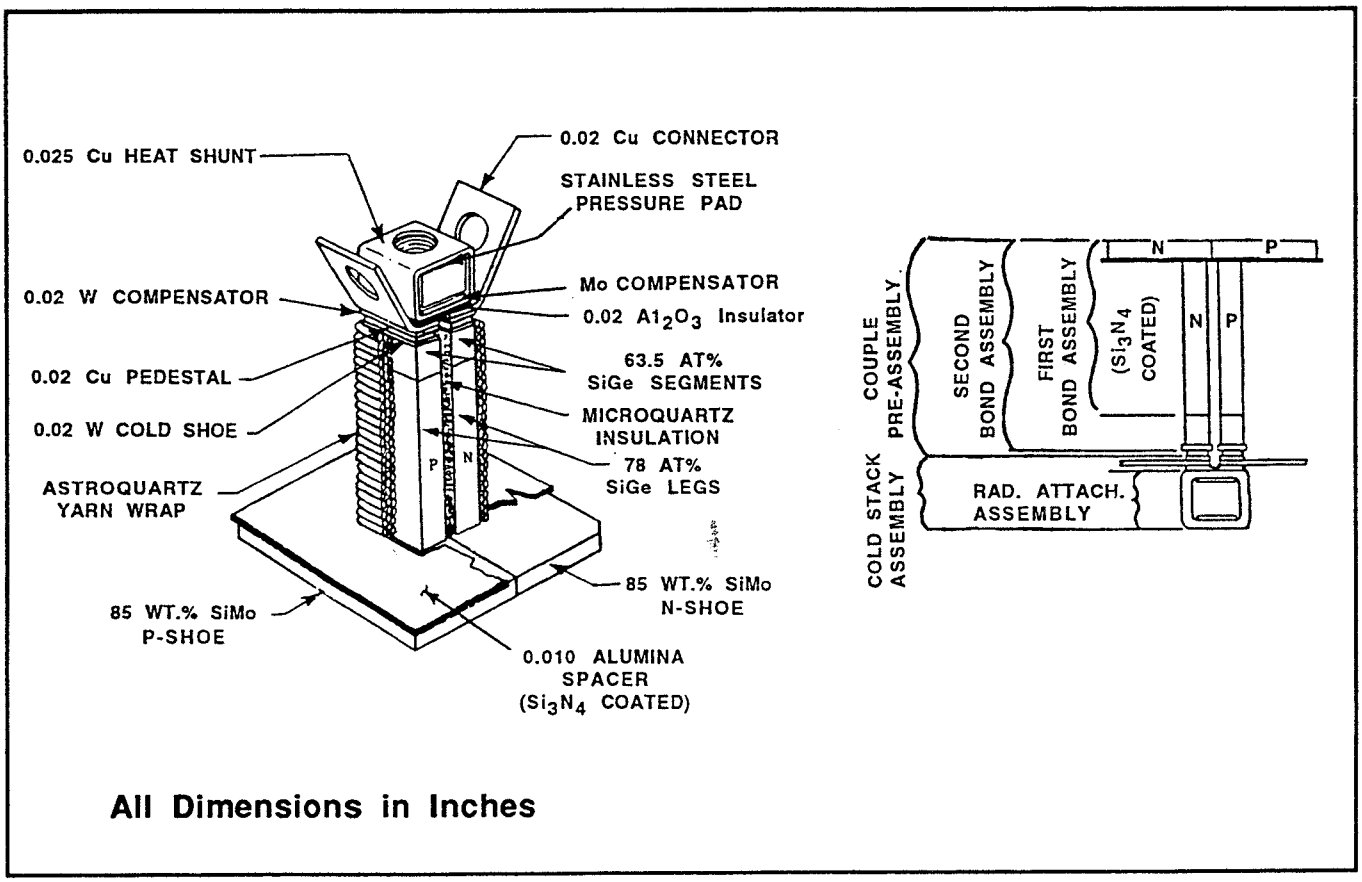

Figure 1-8. Thermoelectric Unicouple

Two compositions of silicon-germanium (SiGe) alloy are used in the fabrication of the thermoelectric legs: 78 atomic percent silicon for the major leg length and 63.5 atomic percent silicon for a small segment at the cold end of the unicouple. The lower silicon content segment is used for matching the thermal expansion of the metallic attachment parts. The two SiGe legs of the unicouple are doped to provide the required thermoelectric properties; the N-type material is doped with phosphorous and the P-type with boron. The corresponding silicon-molybdenum (SiMo) hot shoes are similarly doped to minimize interface electrical resistance at the leg interfaces and to enhance bulk thermal conductivity. The unicouple legs are bonded to a cold stack assembly of tungsten, copper, molybdenum, stainless steel, and alumina parts. The cold stack accommodates thermal expansion effects between hot and cold ends of each unicouple and also provides mounting and electrical interconnection. A silicon nitride coating (approximately 10,000 angstroms thickness) is applied to the unicouple legs and hot shoes to retard silicon sublimation and ensure adequate lifetime of power output performance.

The unicouples are interconnected to form the thermopile electrical circuit through the use of copper straps which are riveted together in the space between the inside of the shell/fin assembly and the outside of the multifoil insulation system. The unicouples are wired in a two-string, series-parallel, electrical circuit to enhance reliability and achieve the required voltage. Each unicouple provides approximately 0.5 watts at 0.2 Vdc. The unicouples are electrically isolated from the multifoil insulation by several layers of Astroquartz yarn tightly wound around the two SiGe legs of each unicouple and by an alumina spacer between the hot shoe and foil insulation.

1.5.1.3 Multifoil Insulation System

The multifoil insulation system consists of an octagonal insulation canister and end caps composed of successive layers of 0.0008 cm (0.0003 inch) molybdenum foil and Astroquartz (SiO_2) cloth separators. The canister has 576 rectangular perforations through which the unicouples and four molybdenum frame supports penetrate for attachment to the shell/fin assembly. The two end caps each have four penetrations for the heat source support preload studs and the inboard end cap has penetrations for the electric heat source power leads and instrumentation, which are closed with ceramic plugs after GPHS module fueling.

The end caps are made of octagonal sheets of foil and cloth separators of varying sizes such that they provide a stepped outer edge mating with the 8-sided thermopile insulation. These stepped corners mate with similar steps on the ends of the thermopile insulation to minimize heat loss. The thermopile insulation is made of staggered layers (in five axial sections) which are folded over an inner molybdenum frame. The octagonal frame is constructed with eight longerons and six rings (Figure 1-9). Six circumferential retaining bands are used around the sections of the foil package so that the assembled foil basket is self-supporting. The total insulation thickness is 1.78 cm (0.70 inches) with a total of 60 metallic layers in both the canister and end caps. The entire insulation assembly is supported by the unicouples through their attachments to the shell/fin assembly. The insulation end caps are held in place by the heat source support system as described in Section 1.5.1.4.

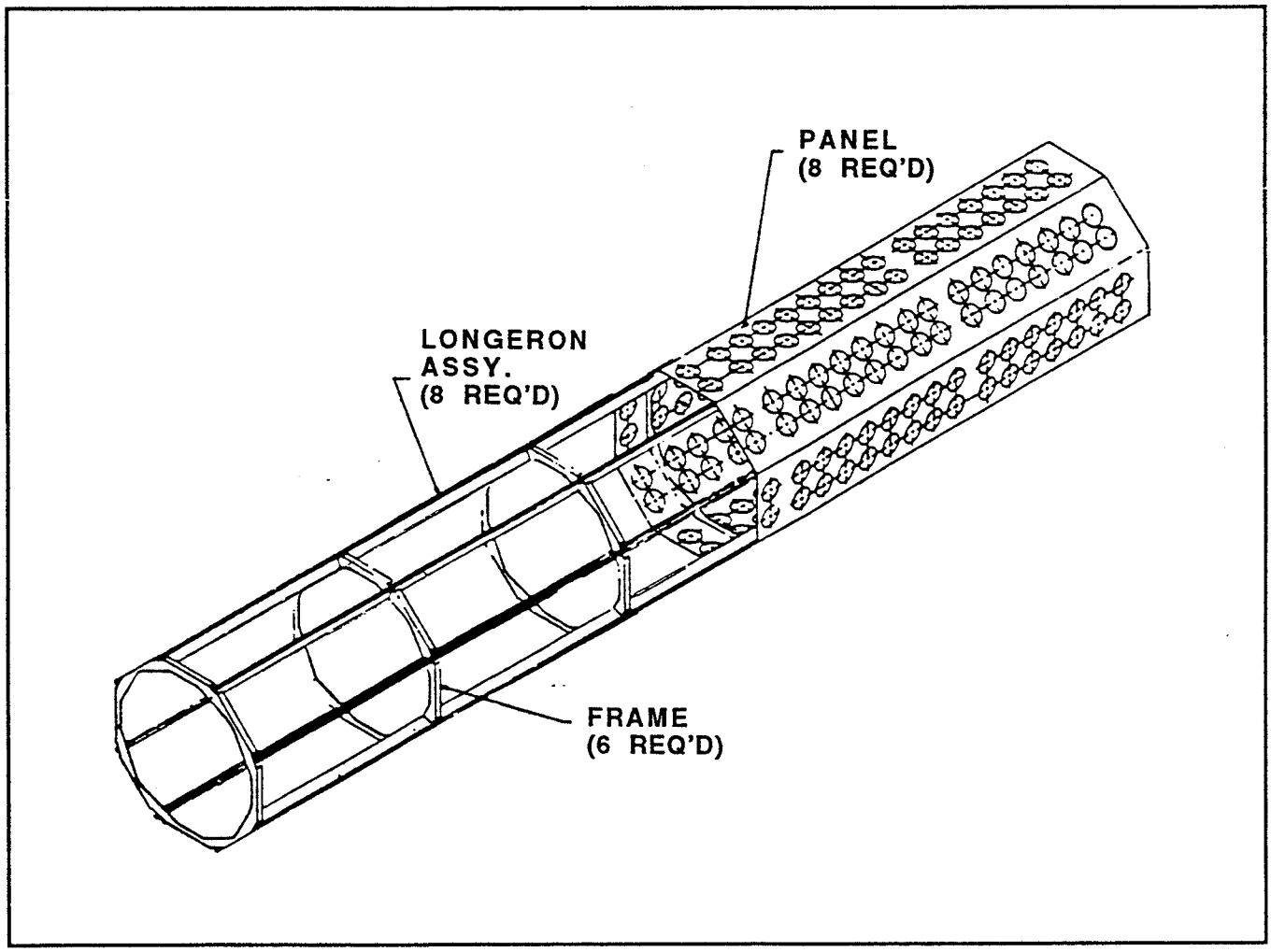

Figure 1-9. Thermopile Inner Frame Assembly

1.5.1.4 Heat Source Support System

Both axial and lateral support systems are used to support the GPHS modules in the GPHS-RTG. Axial support is provided by a system located at the inboard and outboard ends of the GPHS-RTG that maintains a compressive load on the GPHS modules. The inboard and outboard heat source support assemblies are shown in Figures 1-10 and 1-11, respectively.

The inboard assembly consists of a graphite pressure plate, the multifoil end cap insulation assembly, four inconel preload studs, a titanium pressure plate with adjusting nut and three 17-7PH spring washers. The spring washers maintain the axial preload on the heat source while accommodating thermal growth differences between the heat source and converter.

Preload is transmitted through the preload studs to the pressure plate which, in turn, transmits the load to the outer walls of the GPHS modules. Zirconia stud insulators and Astroquartz insulation are used to minimize heat losses through the inconel stud/multifoil insulation penetrations. Tungsten and iridium barriers are used to prevent chemical reactions with the graphite pressure plate.

The outboard assembly consists of a graphite pressure plate, the multifoil end cap insulation assembly, four inconel preload studs and a titanium preload frame (spider). The role of the graphite pressure plate and preload studs is to transmit the load from the heat source to the titanium preload frame which, in turn, transmits the load to the shell/fin assembly.

Lateral support of the GPHS module stack is provided by a midspan support system, as shown in Figure 1-12. Support is provided to the midspan plate which separates the two nine-pack stacks of GPHS modules. The supports are installed in the shell/fin assembly at four locations and utilize 17-7PH spring washers to apply preload via a graphite locating pin to the midspan plate. Fibrous insulation yarn wrap and Astroquartz cloth are used to minimize heat losses and an iridium can assembly is used to contain the various midspan components.

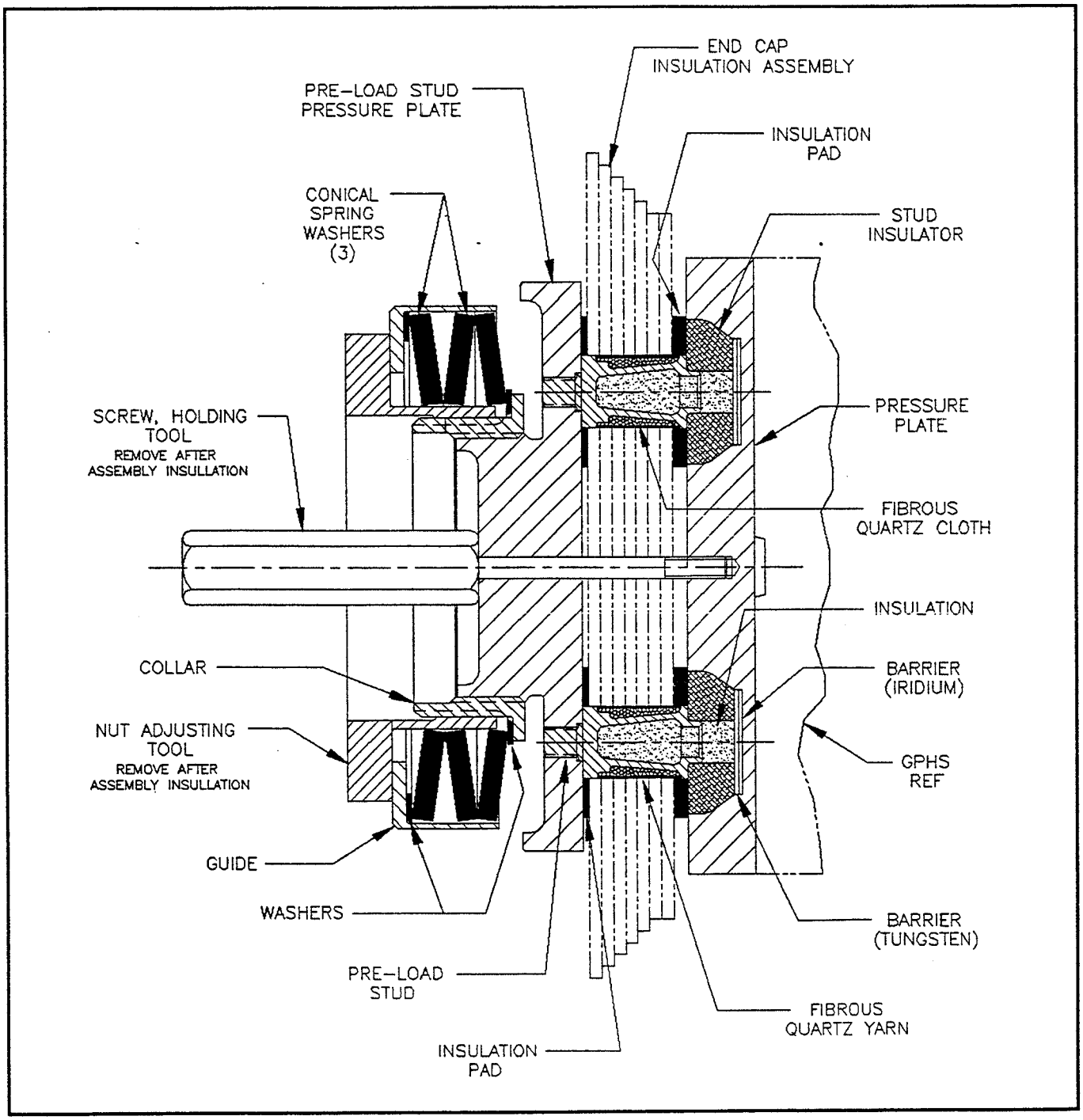

Figure 1-10. Inboard Heat Source Support Assembly

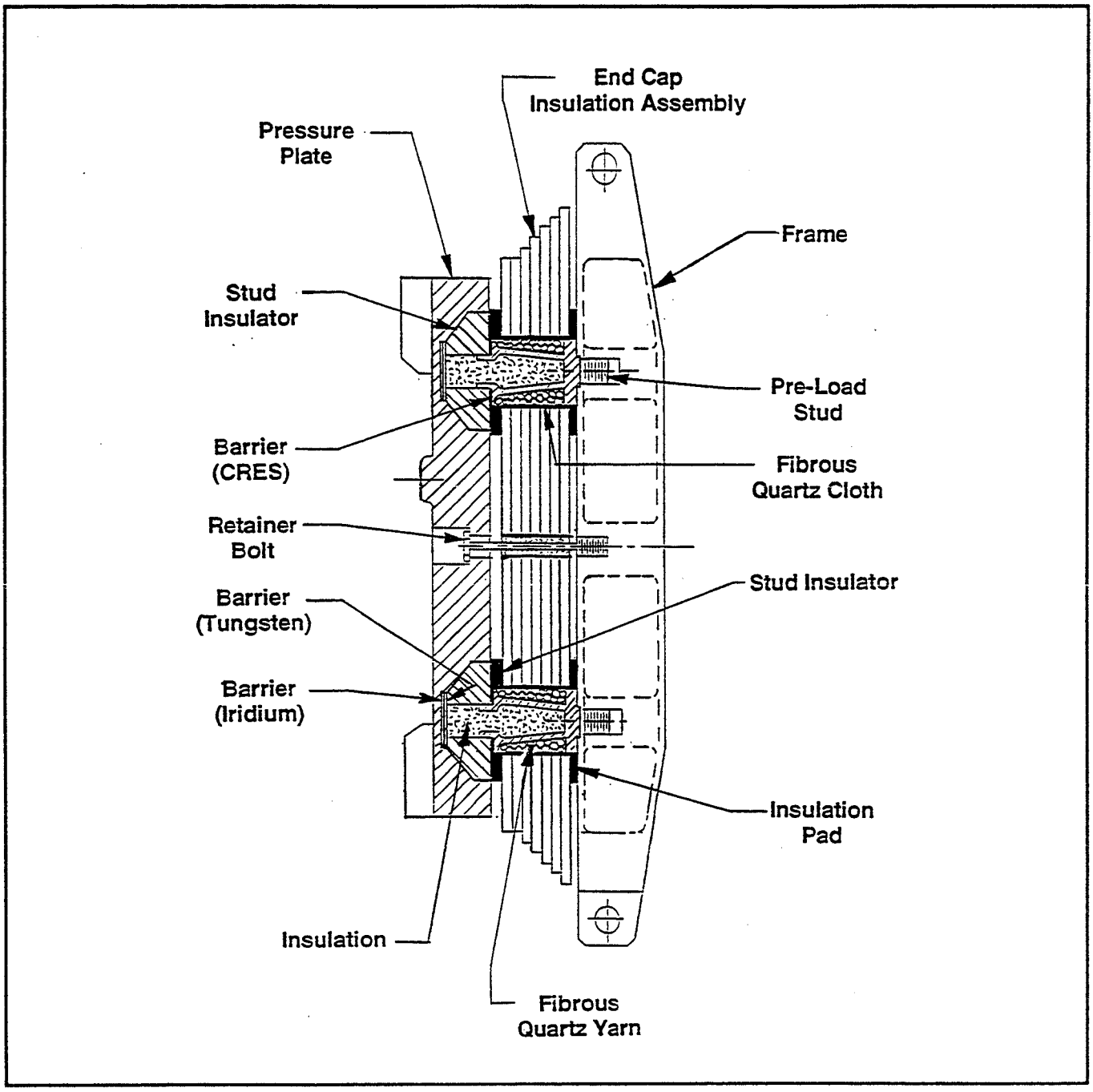

Figure 1-11. Outboard Heat Source Support Assembly

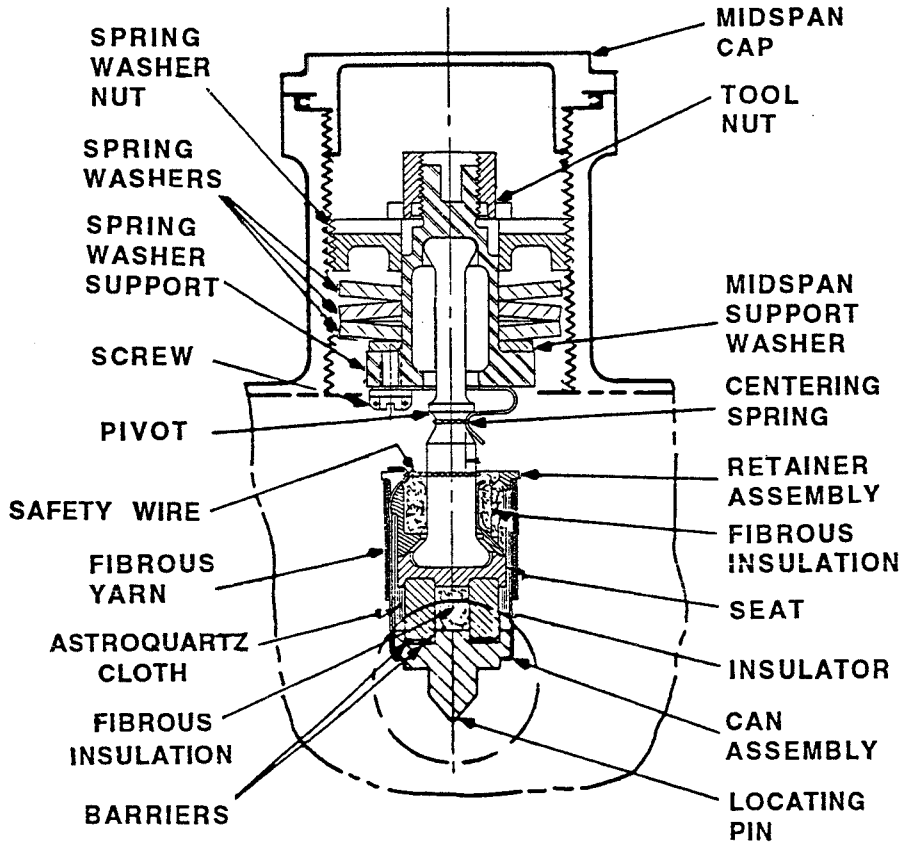

Figure 1-12. Midspan Heat Source Support Assembly

1.5.1.5 Gas Management System

A gas management system is provided to permit pressurizing the GPHS-RTG with an inert cover gas and to vent the cover gas after launch to achieve optimum GPHS-RTG power output. An inert cover gas is required within the GPHS-RTG to protect the molybdenum foil, refractory materials and graphitic components from oxidizing during storage, ground handling operations and launch. The gas management system is comprised of a manually operated, stainless steel bellows valve and a barometrically activated pressure relief device (PRD). The gas management valve (GMV) assembly (valve and tubulation) is an all-welded construction. The GMV assembly is mounted on the inboard end of the shell/fin assembly and a metallic c-seal is used to seal the penetration of the GMV tube to the shell.

The PRD is mounted to the shell/fin assembly on the outboard end. It consists of a vent chamber which contains a sealed diaphragm that penetrates the aluminum shell/fin assembly. A lance is used to penetrate the diaphragm, driven by a hermetically sealed, corrosion resistant steel bellows. All are contained within an aluminum housing. The vent chamber is made of stainless steel and uses an inconel c-seal and locknut to seal it hermetically to the aluminum shell/fin assembly. The PRD is designed to vent the internal inert gas from the GPHS-RTG upon actuation. The PRD is actuated by the expansion of the bellows during launch vehicle ascent as atmospheric pressure decreases. Upon actuation, the lance is driven through a 0.013 cm (0.005 inch) thick stainless steel diaphragm located in the vent chamber. Failure of the PRD to activate after launch is considered to be a single point of failure, in that the required GPHS-RTG power output would not be achieved. Its failure, however, would not result in physical damage to the GPHS-RTG, spacecraft, or launch vehicle.

1.5.1.6 Instrumentation

The GPHS-RTG has four Resistance Temperature Devices (RTDs) mounted on the exterior of the shell/fin assembly for measuring surface temperature. The temperature sensors are connected to an electrical connector which is mounted on the inboard end of the GPHS-RTG and which serves as the interface with the spacecraft instrumentation connector.

1.5.2 Materials and Weights

A summary of the various converter components, reference drawings, materials, and weights are presented in Table 1-6. The weights listed in this table may be either calculated or actual.

1.5.3 Materials Properties

Material properties for the converter components are summarized in Appendix B.

Table 1-6. Thermoelectric Converter Component Weights and Materials

Item	Material	Quantity	Weight (kg)
Shell/Fin Assembly			
(LMMS-VF Dwg. 47J306130)			
Outer Shell w/Fins, Coating	2219-T6 Al	1	8.569
Aux. Cooling Tube Manifold	2219-T87 Al	1	0.259
Barrel Nuts	Inconel A286	4	0.050
Converter Assembly			
(LMMS-VF Dwg. 47J305032)			
T/E Unicouples	SiGe	572	5.398
T/E Sealing Screws	Ti-6Al-4V	572	0.699
Hot Shoe Spacers	Al_2O_3	572	0.290
Nut Plates	Ti-6Al-4V	286	0.381
Foil Insulation - T/P	Mo and Astroquartz	1	5.511
Insulation Frame Support	Mo	1	0.866
Power Connector	Inconel X-750	1	0.132
Gas Management Assembly	316L SS	1	0.163
Electrical Straps	Copper-OFHC	X	0.748
PRD	2219-T87 Al/SST'L	1	0.426
Pressure Dome	2219-T87 Al	2	0.762
RTD Assembly	IN X-750/Cu and Varglas	1	0.304
Misc. Hardware, Insulation	Numerous	X	0.562
Inner Frame Support Assy.	Mo, Mo-Re	1	0.225
(LMMS-VF Dwg. 47E306254)			
Heat Source Support Assy.			
Outboard Support Assy.			
(LMMS-VF Dwg. 47D305155)			
Frame	Ti 6-2-4-2	1	0.413
End Cap. Insulation Assy.	Mo and Astroquartz	1	0.290
Pressure Plate	FWPF Graphite	1	0.308
Stud Insulator	ZrO_2	4	0.122
Preload Stud	Inconel X-750	4	0.068
Latch	Inconel X-750	4	0.091
Misc. Hardware, Insulation	Numerous	X	0.065

Table 1-6. Thermoelectric Converter Component Weights and Materials (Cont'd)

Item	Material	Quantity	Weight (kg)
Heat Source Support Assy.			
Inboard Support Assy.			
(LMMS-VF Dwg. 47D305125)			
Frame	Ti 6-2-4-2	1	0.508
Pressure Plate	Ti 6-2-4-2	1	0.358
End Cap Insulation Assy.	Mo and Astroquartz	1	0.263
Spring Washer	17-7-SS	3	0.513
Collar	Ti 6-2-4-2	1	0.068
Guide	Inconel X-750	1	0.168
Preload Stud	Inconel X-750	4	0.068
Pressure Plate	FWPF Graphite	1	0.222
Stud Insulator	ZrO_2	4	0.122
Latch	Inconel X-750	4	0.036
Misc. Hardware, Insulation	Numerous	X	0.047
Midspan Support Assy.			
(LMMS-VF Dwg. 47D306036)			
Cap	2219-T87 Al	4	0.109
Pivot	René 41	4	0.059
Support	Inconel X-750	4	0.113
Lock Nut	2219-T87 Al	4	0.050
Spring Washer Nut	Inconel X-750	4	0.109
Spring Washer	17-7 PH SST'L	12	0.018
Can Assembly	Iridium	4	0.068
Locating Pin	FWPF Graphite	4	0.023
Misc. Hardware, Insulation	Numerous	X	0.180
Midspan Plate	FWPF Graphite	1	0.259
	Total Thermoelectric Converter		30.063